KOALA
LIVING

Assembly Instruction

Product Name: Pazin Brown Vegan Leather Bar Stool
Product Id: 125670

Hardware List

A	Allen Bolt M6x20mm	7 pcs
B	Allen Bolt M6x16mm	4 pcs
C	Allen Key M6	1 pc

Part List

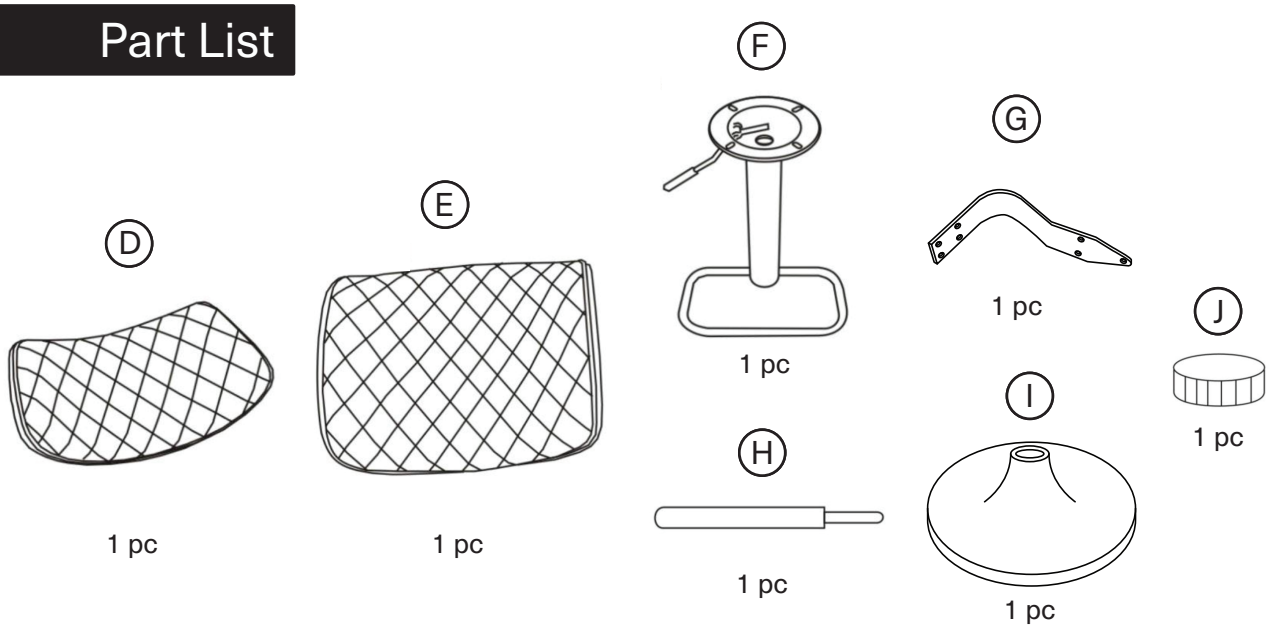

Note

1. Assemble the item on a soft, well-lit surface like cardboard or carpet.
2. For safety and efficiency, it's best to have two or more people assist with assembly to handle heavy parts safely and collaborate effectively.
3. Keep all packaging materials intact until assembly is complete.
4. Before assembling the item, carefully read all provided instructions.
5. Handle tools with care during assembly to prevent injuries.

1

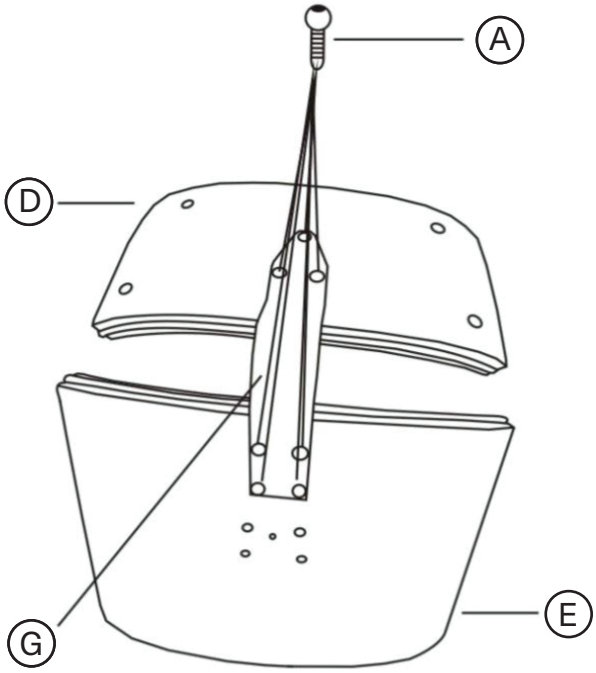

2

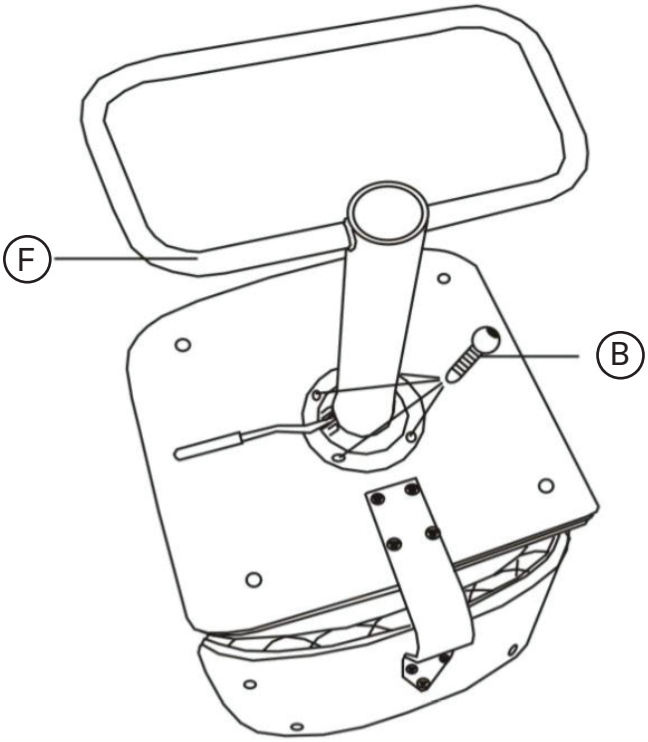

3

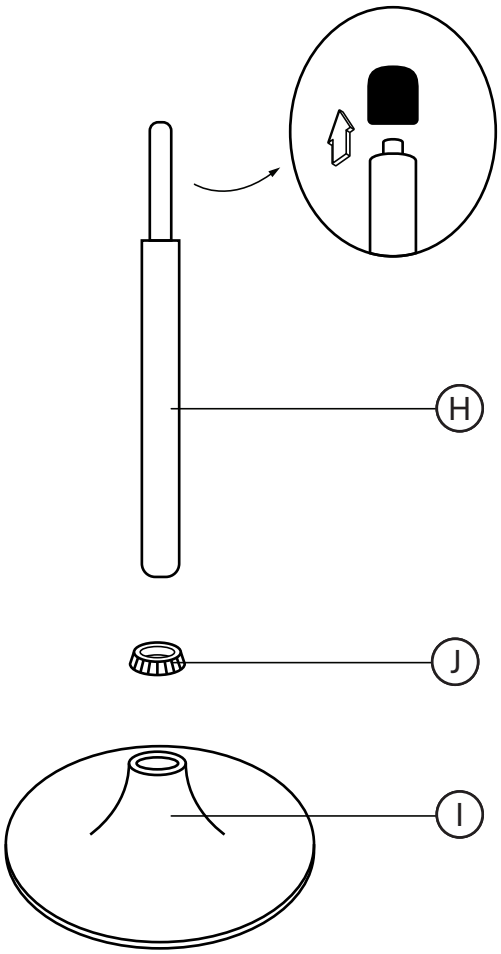
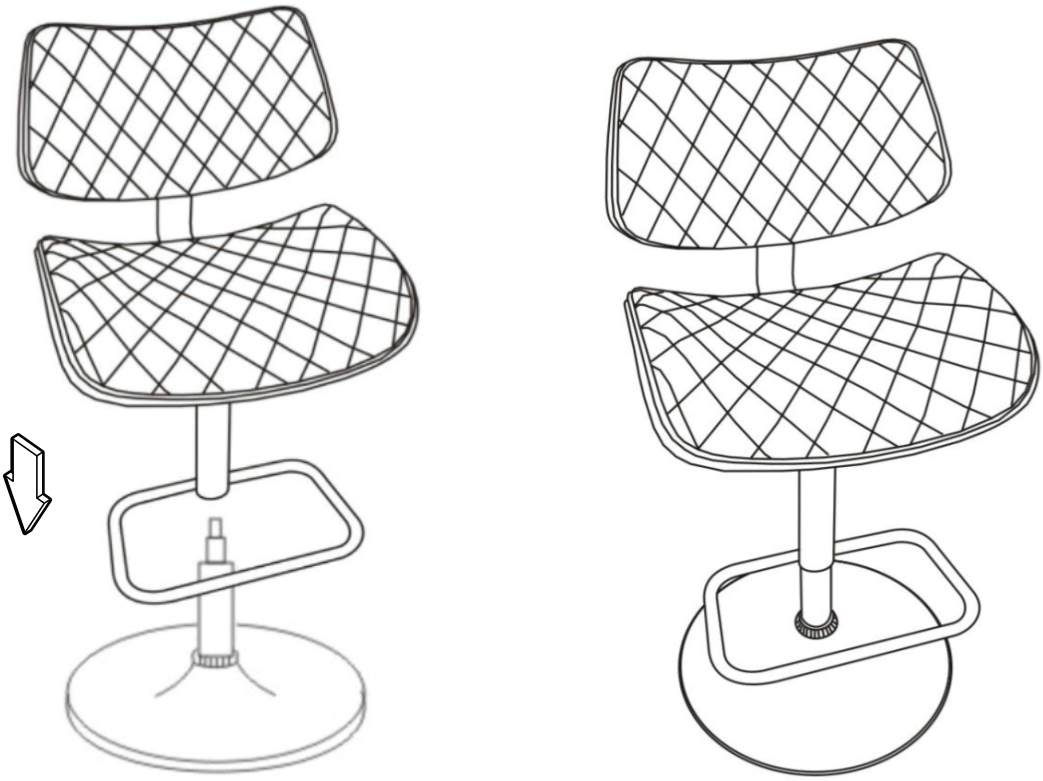
4