KOALA
LIVING

Assembly Instruction

Product Name: Terra Linea Light Ash Veneer Dining Table - Round Two Legs 240cm x 120cm
Product Id: 131640

Hardware List

A		Washer 8*19	14 pcs
B	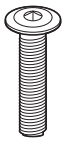	Allen Bolt M8*40	14 pcs
C		Allen Key 5mm	1 pc
D		Adjustable Stopper (Already Assembled)	4 pcs

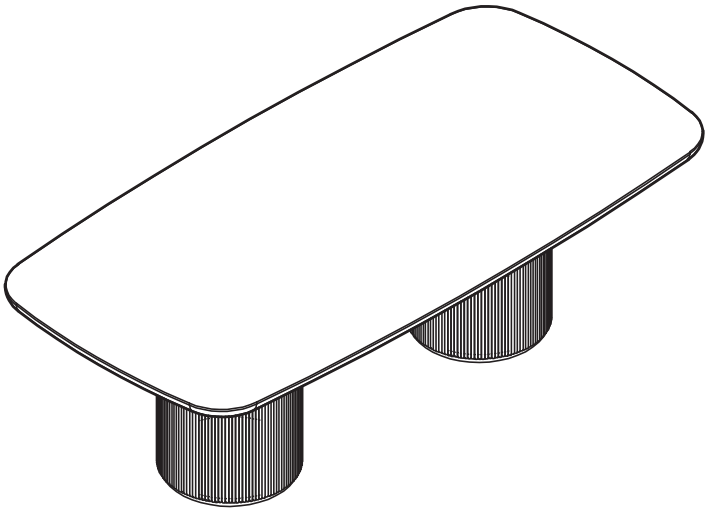

Part List

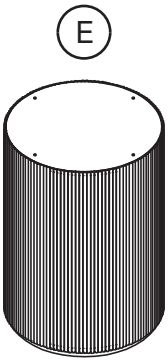

Leg
2 pcs

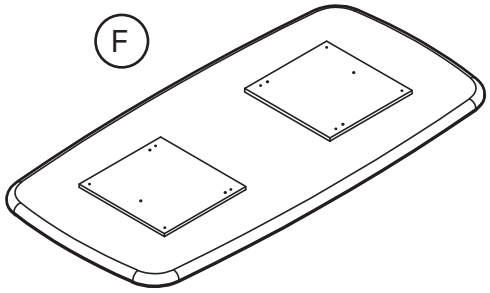

Table Top
1 pc

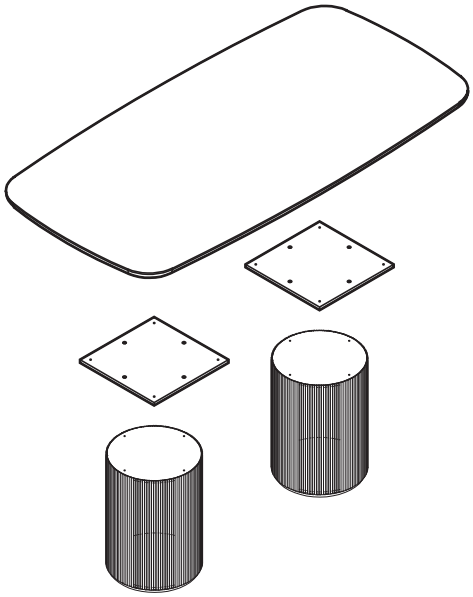

Note

1. Assemble the item on a soft, well-lit surface like cardboard or carpet.
2. For safety and efficiency, it's best to have two or more people assist with assembly to handle heavy parts safely and collaborate effectively.
3. Keep all packaging materials intact until assembly is complete.
4. Before assembling the item, carefully read all provided instructions.
5. Handle tools with care during assembly to prevent injuries.

1

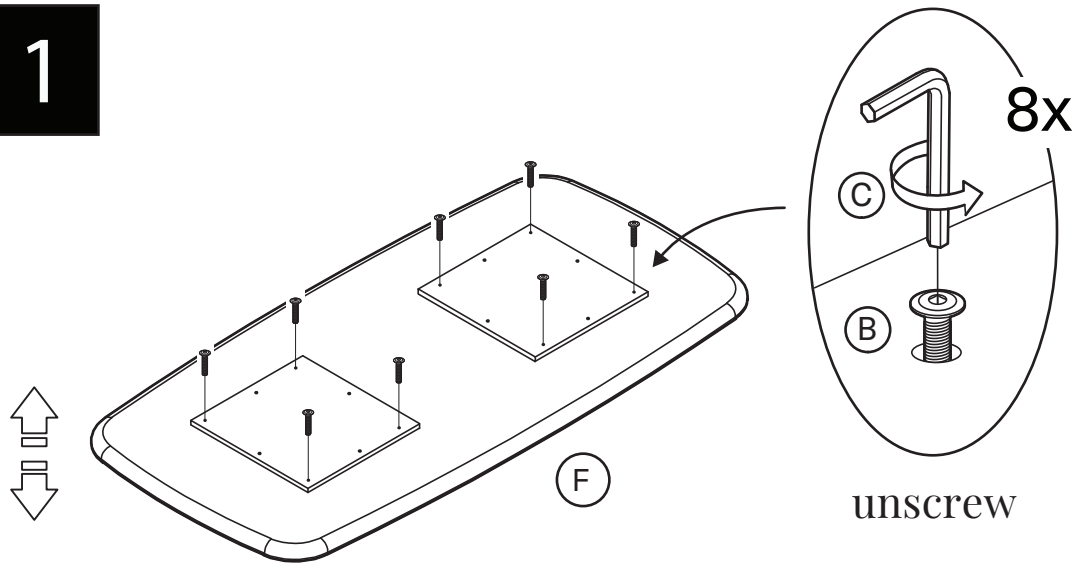

2

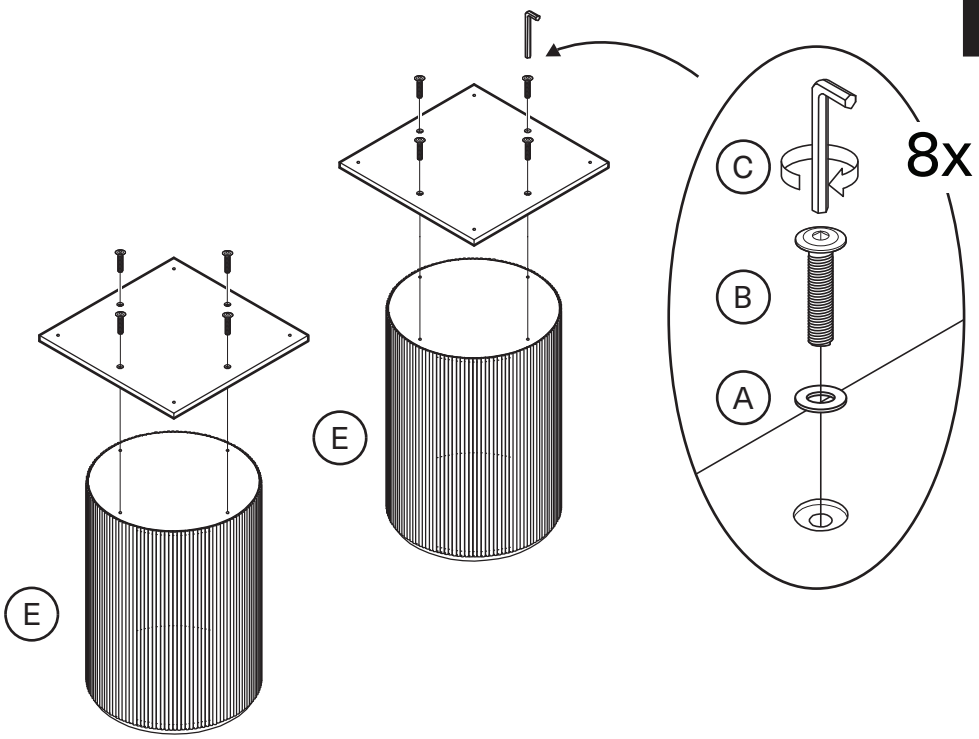

3

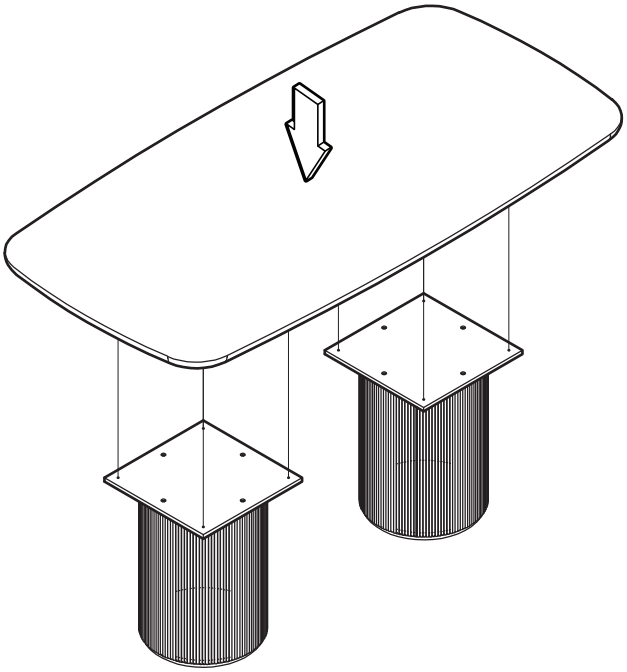

4

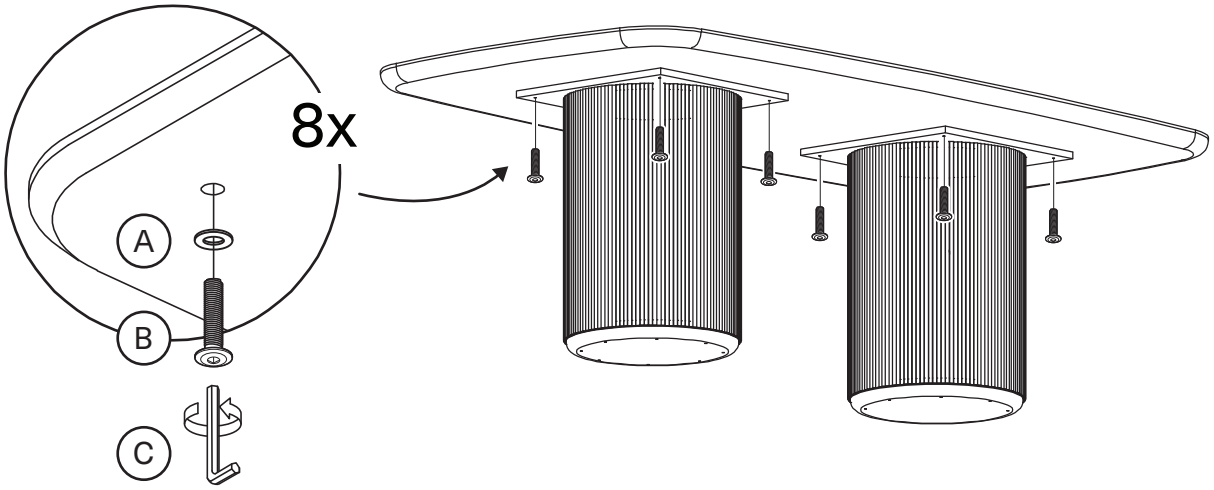

5

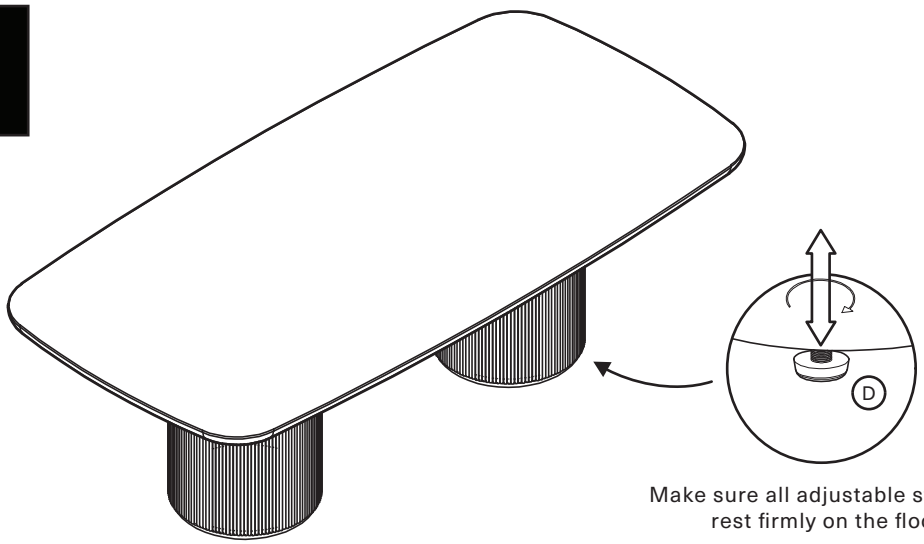

Make sure all adjustable stoppers rest firmly on the floor.