# KOALA
LIVING

# Assembly Instruction

Product Name: Bubbles Transparen Glass Chandelier 80cm

## Hardware List

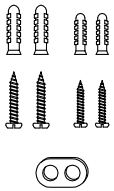

Nylon Plug - 4Pcs
(⌀8*38mm / ⌀5*25mm)

Self-Tapping Screw-4Pcs
(ST4.5*35mm / ST3.2*22mm)

Figure- 8 Clasp- 1Pcs

Terminal Block- 1Pcs

G9 Bulb- - 16Pcs
(Not included)

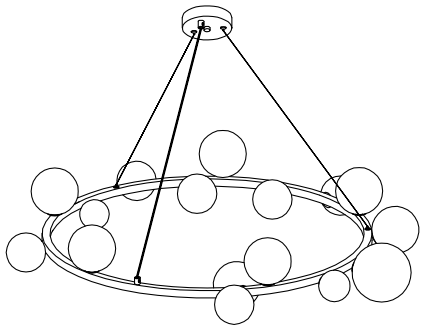

## Parts List

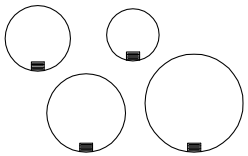

Glass Shade- - 1Set
(⌀80- 4Pcs, ⌀100- 7Pcs, ⌀120- 4Pcs, ⌀150- 2Pcs)

Mounting Plate- B
Screw

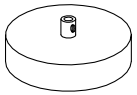

Mounting box B- - 1Set

Mounting Plate- A
Threaded Cap

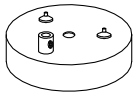

Mounting box A- - 1Set

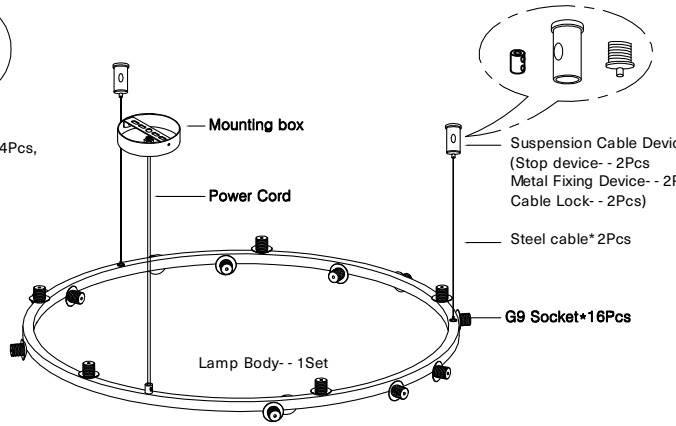


## Note

1. Turn off the main power supply before starting the installation.
2. We recommend that installation of this lighting fixture be done by a licensed electrician.
3. Check all parts and read the instructions before installation.
4. Ensure all wire connections are secure and properly insulated.
5. Handle electrical wires and tools with care to avoid damage or injury.
6. Do not restore power until the fixture is fully installed and securely mounted.

## 1

Installation Method A

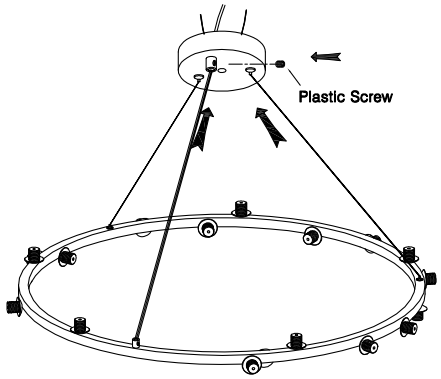


Installation Method B

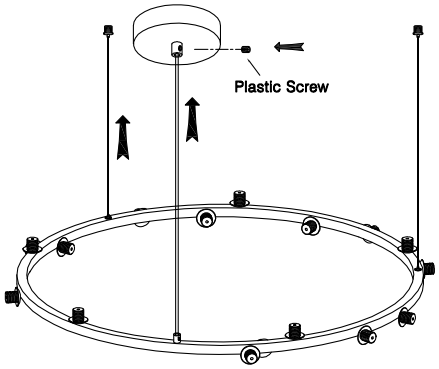


1. After passing the power cord through the mounting box, adjust it to the appropriate installation height, then tighten the plastic screw with a screwdriver, adjust the steel cable to the desired height

## 2

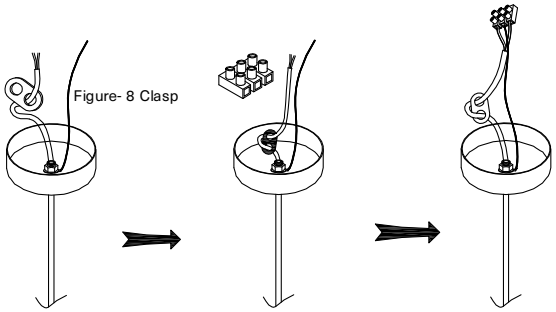


2. Pass the figure- 8 clasp through the power cord as shown in the diagram above, Until it reaches the bottom of the mounting box. connect the power cord to the terminal block respectively.

## 3

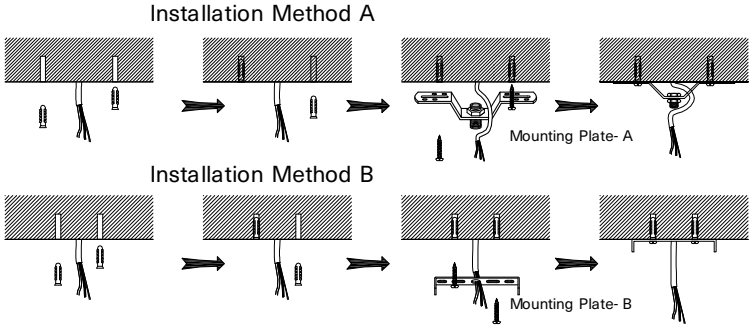


3. Use a drilling machine to drill two hole into a solid ceiling, then insert the nylon plug into the hole. screw the self- tapping screw through the mounting plate and tighten it into the nylon plug until secured.

## 4

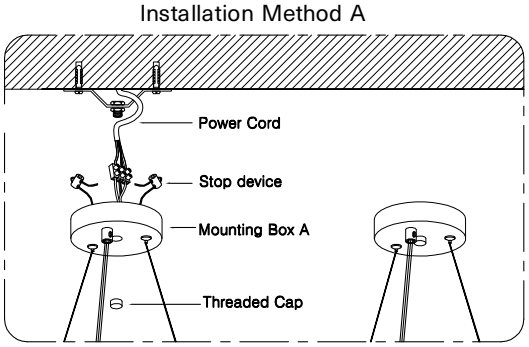


4. Connect the power cord to the terminal block, Pass the mounting box through the mounting plate and tighten the thrreaded cap. Adjust the steel cable to level the lamp body, and move the stop device to the bottom of the mounting box.

## 5

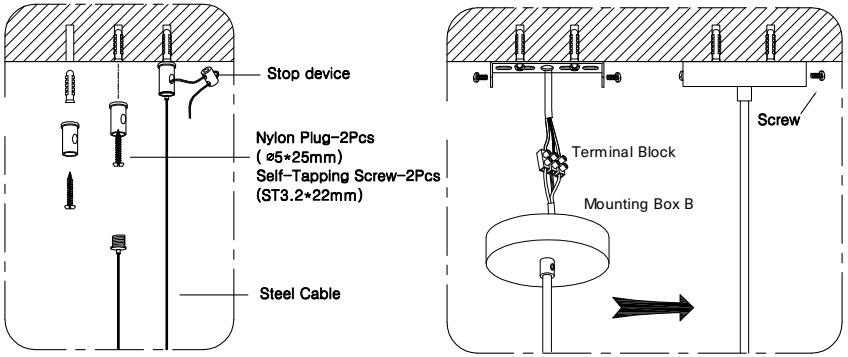


5. Connect the power cord to the terminal block, pass the mounting box through the mounting plate and tighten the screw.
Insert the nylon plug into the hole, drive the self- tapping screw through the metal fixing device and tighten it into the nylon plug until secured,
Screw the cable lock into the metal fixing device, adjust the steel cable to level the lamp body, and move the stop device to the bottom of the metal fixing device.

## 6

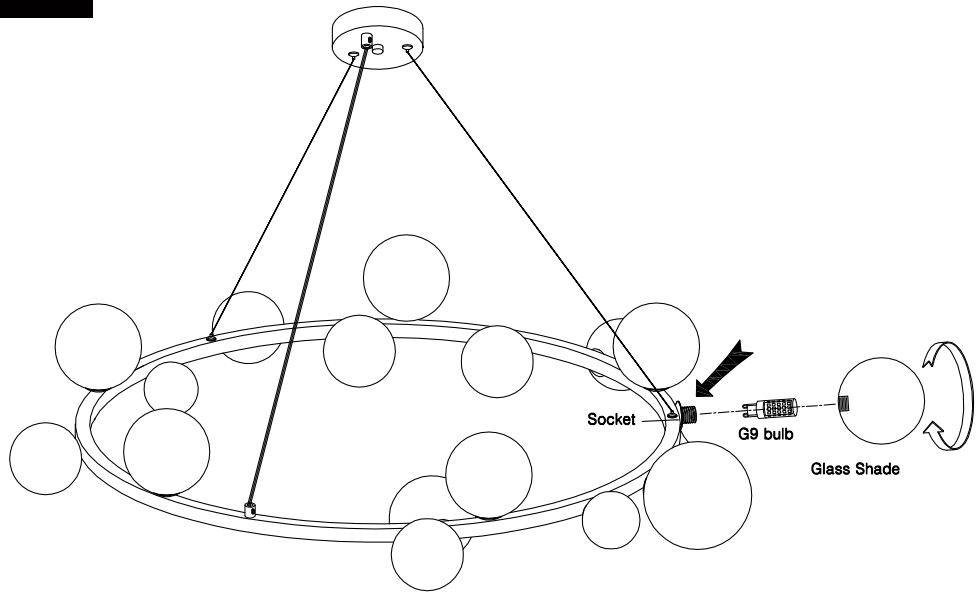


6. Install bulb into socket, Then install lamp shade into socket.
Installation completed

## Important Safety Instruction

Please select a solid and level surface for mounting. For installation on gypsum board, or decorative ceiling panels, additional reinforcement is required;
Prior to installation, verify that the luminaire functions correctly by performing a test;
Before installing or removing the bulb, please turn off the power;
Do not allow children to touch the lamp holder or bulb. Bulbs that have been on for a long time will be hot to the touch; please do not touch them.

220- 240V a.c, 50Hz G9; Max. 16* 7W ta: 25°C

If the external flexible cable or cord this luminaire is damaged, it shall be exclusively replaced by the manufacturer or his service agent or a similar qualified person in order to avoid a hazard.