KOALA
LIVING

Assembly Instruction

Product Name: Solene Chandelier-Smokey Glass
Product Id: 131828

Hardware List

Pull Clasp — 1 pc

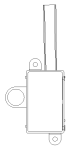

Terminal Block — 1 pc

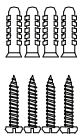

Screws — M4*30mm*4 sets

E14 Bulb-13pcs
(Not Included)

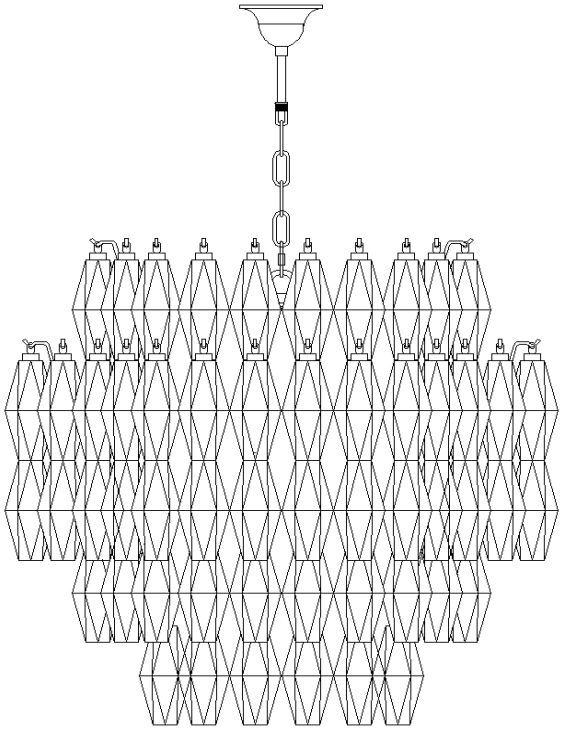

Parts List

A

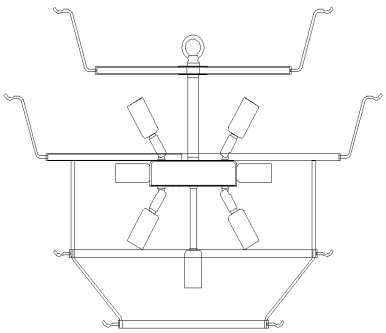

Lamp Body — ϕ 650mm *1 pc
matte brass

B

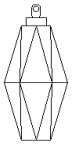

Smokey Glass
60 pcs

C

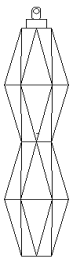

Smokey Glass
31 pcs

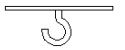

Mounting Plate — 1 pc silver

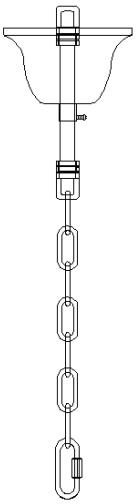

Canopy — ϕ 110*H75*1 pc
matte brass

Metal Tube — ϕ 11. 5*H100*1 pc
matte brass

Chain Group —100cm* 1 set
matte brass

Note

1. Turn off the main power supply before starting the installation.
2. For safety, it is recommended that two people assist during installation.
3. Carefully read all instructions and check that all parts are included before beginning installation.
4. Ensure all wire connections are secure and properly insulated.
5. Handle electrical wires and tools carefully to avoid damage or injury.
6. Do not restore power until the fixture is fully installed and securely mounted.

1

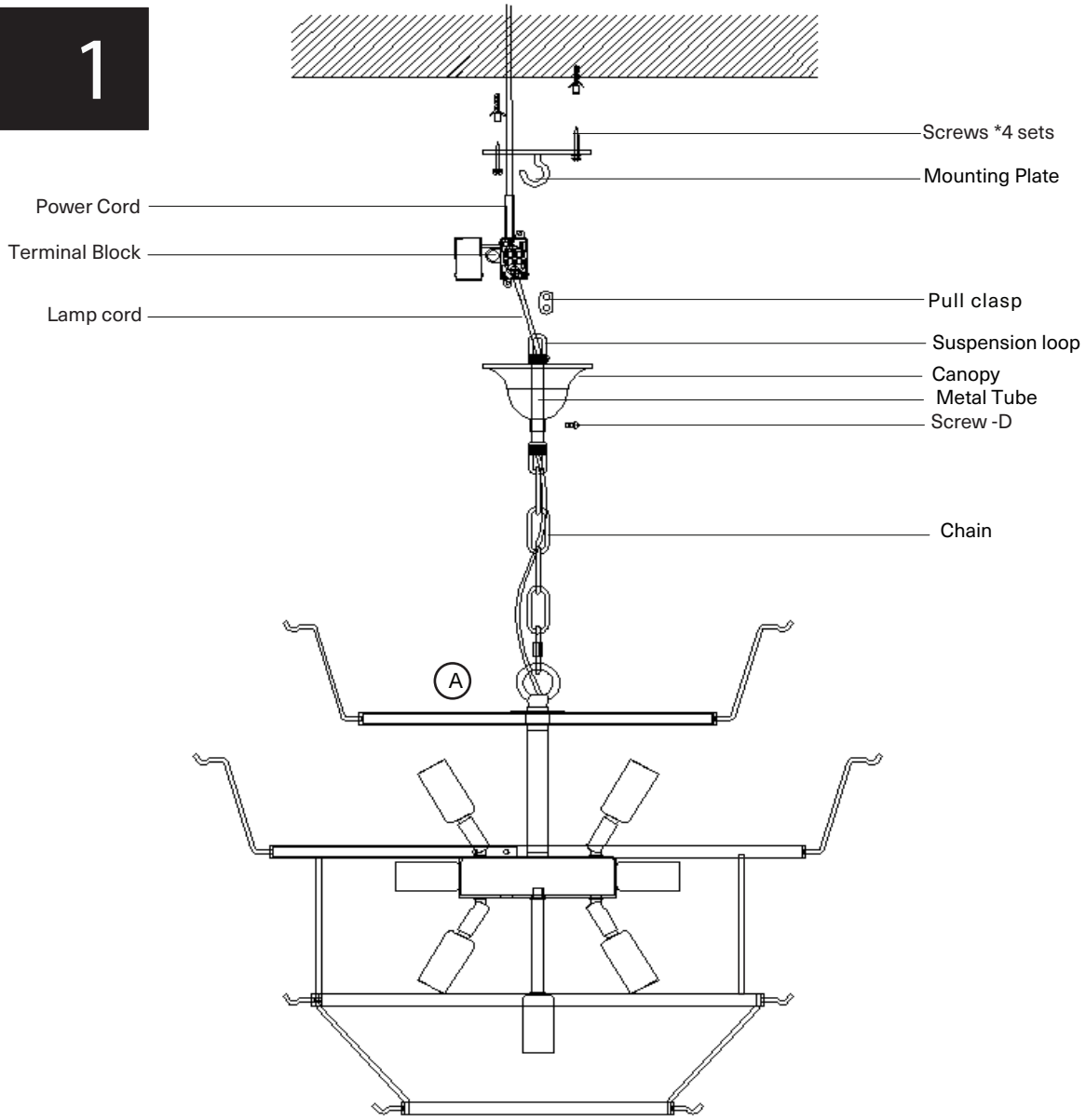

1. Take all parts out of the box and place them on the carpet or floor.
2. Install the expansion tubes into the ceiling.
3. Attach the mounting plate to the expansion tubes using screws.
4. Loosen the side screw-D and hang the suspension loop on the mounting plate .
5. Connect wires to the terminal block (ensure power is OFF).

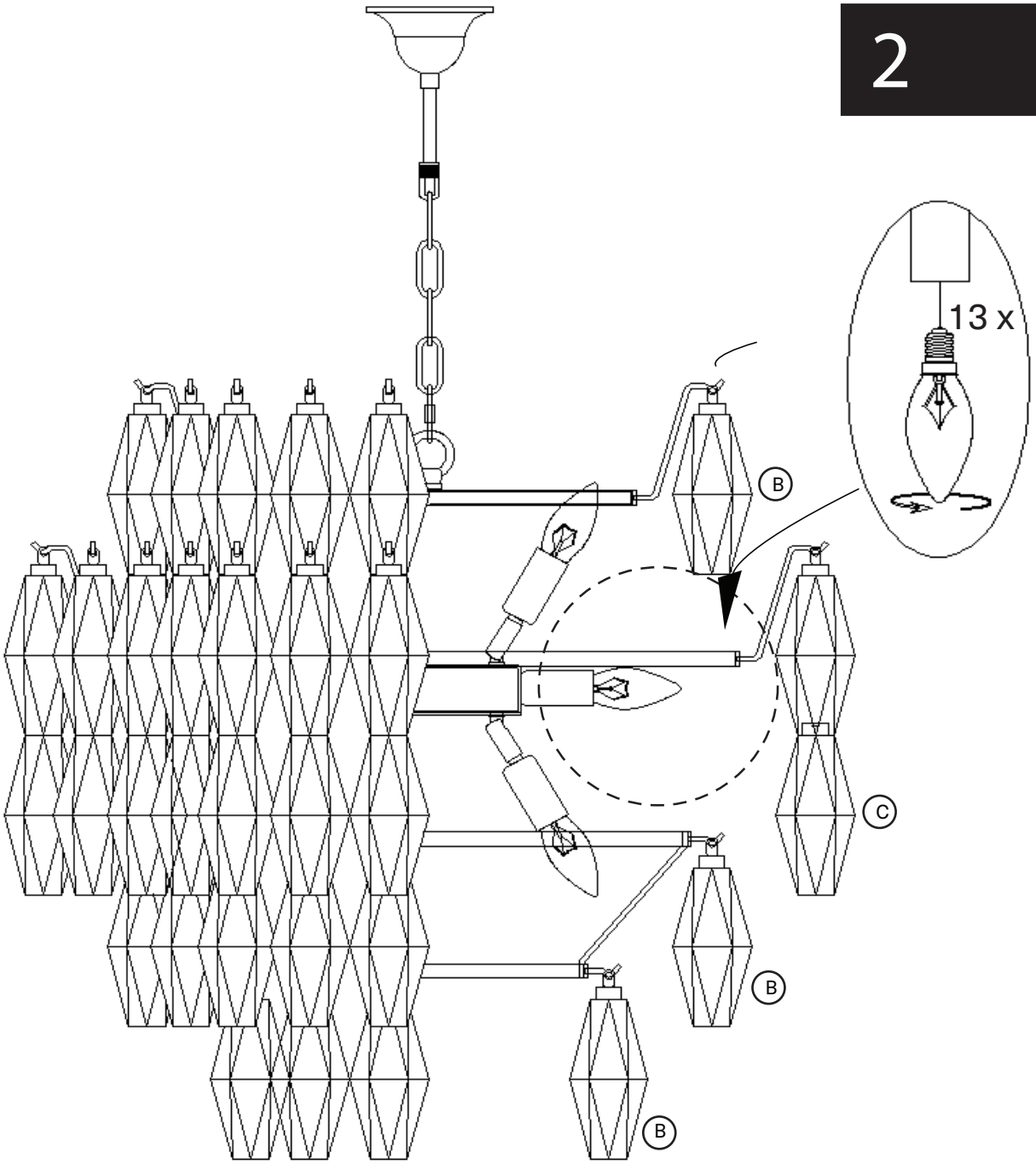

6. Lift the canopy, cover the mounting plate, and tighten the screw-D.
7. Install the light bulb (not included).
8. Attach Glass B and C to the lamp body.

220-240V a.c, 50Hz 13*E14; Max.40W

If the external flexible cable or cord this luminaire is damaged, it shall be exclusively replaced by the manufacturer or his service agent or a similar qualified person in order to avoid a hazard.